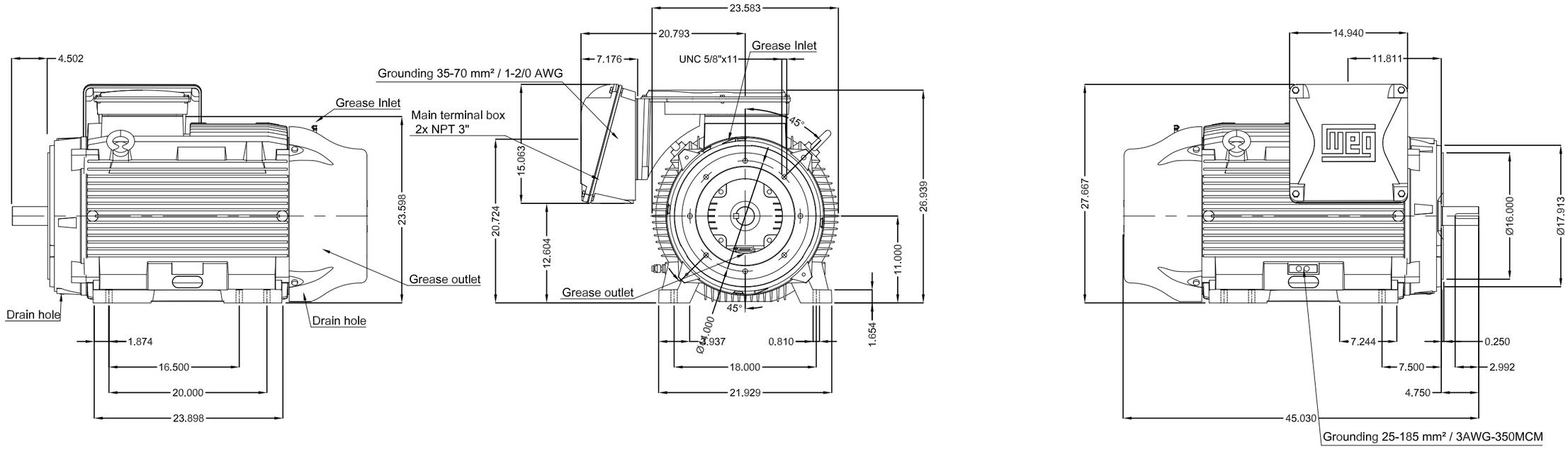

Without vertical jackscrews
TS shaft end
Color RAL 5009
Painting plan 203A
Mounting NEMA F-1
Mounting B34R(D)

DE Shaft End

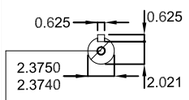

DUNC 3/4"-10 WEG WPR-7339

150 HP 04 Poles 60 Hz | A

ECM	LOC	SUMMARY OF MODIFICATIONS	HYBRISUSER				00
			EXECUTED	CHECKED	RELEASED	DATE	VER

EXECUTED	HYBRISUSER
CHECKED	
RELEASED	
REL. DATE	

THREE PH. MOTOR W22 NEMA PREM. EFF.
FRAME 445/7TSC IP55 TEFC

PREVIEW
WDD 00
SHEET /

Dimensions in inches

A3

WEG's property. Forbidden reproduction without previous authorization.