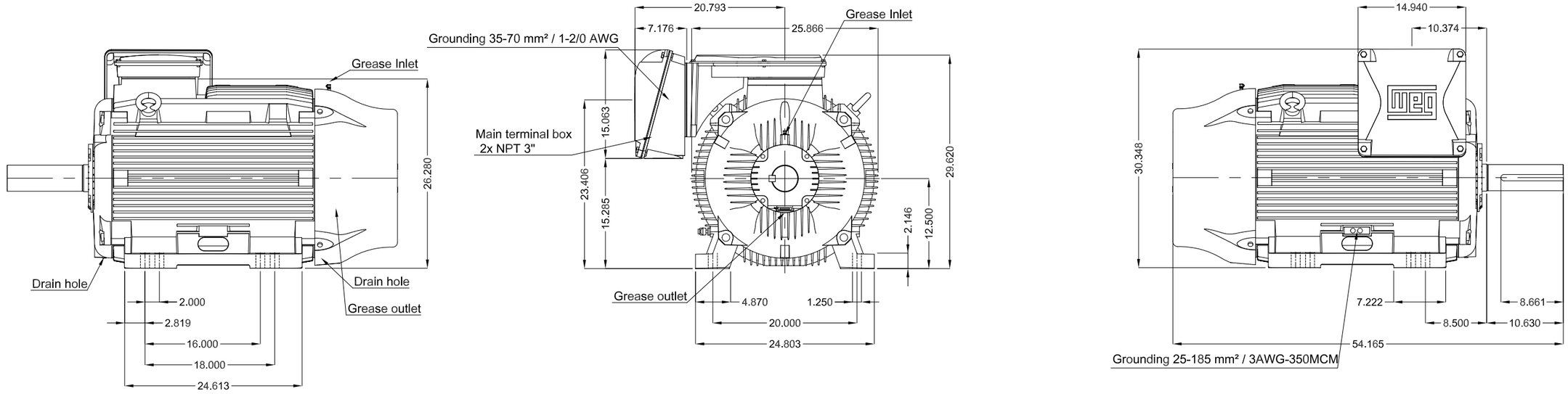

- Without vertical jackscrews
- DE roller bearing
- Shaft locking device
- NDE endshield with electrically insulated bearing hub
- Color RAL 5009
- Painting plan 203A
- Mounting NEMA F-1
- Mounting B3R(D)

DE Shaft End

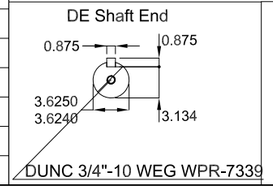

DUNC 3/4"-10 WEG WPR-7339

125 HP 04 Poles 60 Hz | A

ECM	LOC	SUMMARY OF MODIFICATIONS	EXECUTED	CHECKED	RELEASED	DATE	VER
			HYBRISUSER				00

EXECUTED	HYBRISUSER
CHECKED	
RELEASED	
REL. DATE	

THREE PH. MOTOR W22 NEMA PREM. EFF.
FRAME 504/5T IP55 TEFC

PREVIEW

WDD 00

SHEET /

Dimensions in inches

A3

WEG's property. Forbidden reproduction without previous authorization.