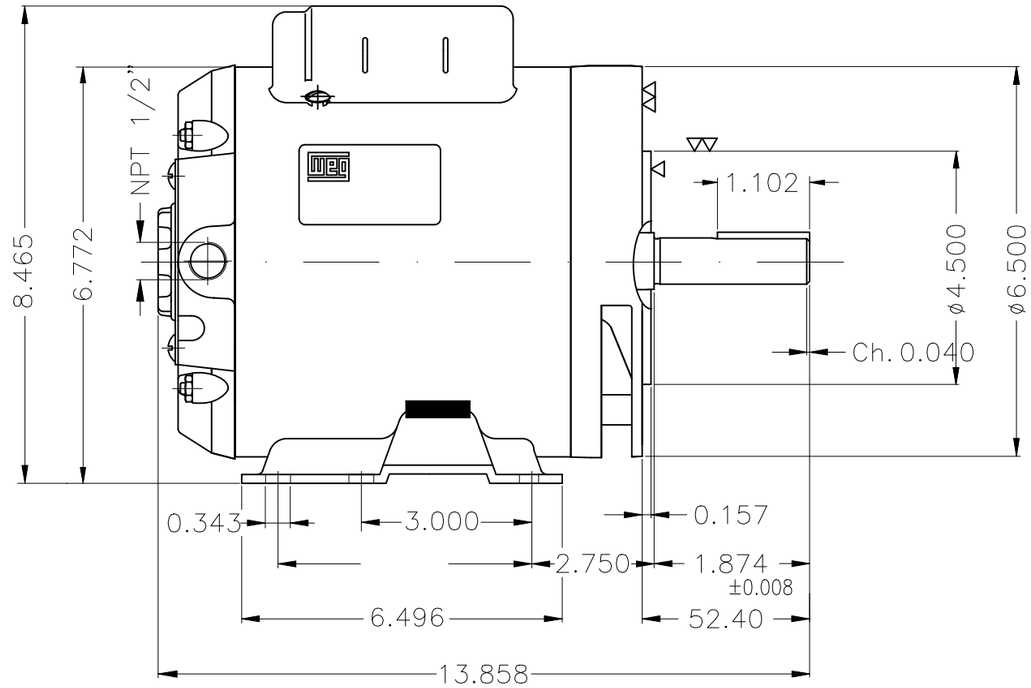

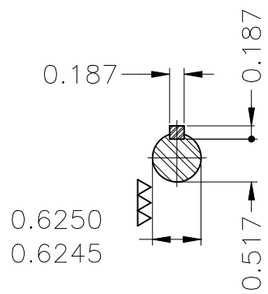

Bearing cap							
Color Munsell N 1 matte black							
Painting plan 207N							
Mounting B34R(D)							
			HYBRISUSER				00
ECM	LOC	SUMMARY OF MODIFICATIONS	EXECUTED	CHECKED	RELEASED	DATE	VER

EXECUTED	HYBRISUSER	SINGLE PH. MOTOR COMPRESSOR DUTY	PREVIEW	
CHECKED		FRAME G56HC IP21 ODP	WDD 00	
RELEASED				
REL. DATE		WMO Jaragua do Sul Product Engineering	SHEET 1 / 1	

5 HP 02 Poles 60 Hz

A

Dimensions in inches

XME A3

WEG's property. Forbidden reproduction without previous authorization.